Grantek Systems Integration

BEYOND COMPLIANCE:
Cost Savings of Integrating Safety

GRANTEK

November 30th 2017

Jeff Winter, CSP, FS Eng.
Director, Safety Practice

Today's Speaker: Jeff Winter

BIO:

- TUV Certified Functional Safety Engineer (FS Eng)
- Board Certified Safety Professional (CSP)
- Industry speaker and writer
- American Society of Safety Engineers:
  - President of Three Rivers Chapter
  - Officer of Manufacturing Practice Specialty
- Z244.1 Accredited Standards Committee
- ISA Machine Safety Sub-Committee Chairman
- B11 Accredited Standards Committee
  - B11.19 Revision
  - B11.20 Revision

Today's Agenda

- Trends in Machine Safety
- Capital Project Savings Considerations
- Engineering Savings Considerations
- Operational Savings Considerations
- How to move forward

Hold Your Questions

Email: jeff.winter@grantek.com

Why Invest in Safety?

- **To Protect Employees**
  - Protect employees from unsafe conditions
  - Protect employees from know hazards
- **To Reduce Costs**
  - Reduced medical, insurance, and workers comp expenses
  - Reduced litigation expenses
  - Reduced Capital, engineering, and procurement costs
- **To Achieve Compliance**
  - Regulatory & Company Compliance
- **To Protect Brand Reputation**
  - Bad publicity causes reduced sales
- **To Improve Morale**
  - Employees are happier when they know someone cares
- **To Improve Productivity**
  - Limited machine shut down vs. stopping completely
  - Reduced occurrence for full system lockout/tagout

History of Machine Safeguarding Technology

1970 1980 1990 2000 2010 2017+

Prevent Access | Detect Access | Control Access

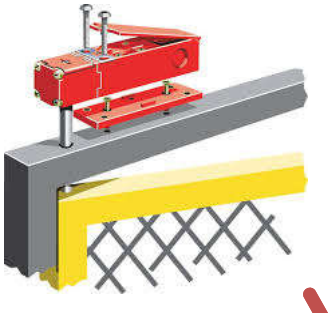

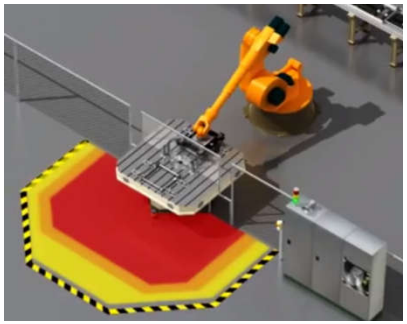

Major changes in machine technology and standards

Hardware Consolidation

AUTOMATION COMPONENTS

SAFETY COMPONENTS

Physically Independent

Safe Automation Components

Safe Logic

Safe Motion Control

Safe Fluid Power

Platform Integration

Separate Automation Control Architecture

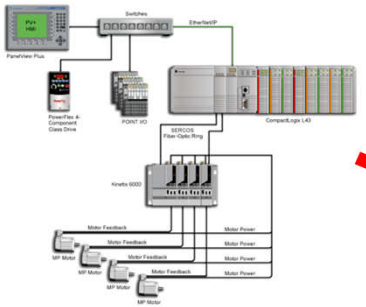

Separate Safety Control Architecture

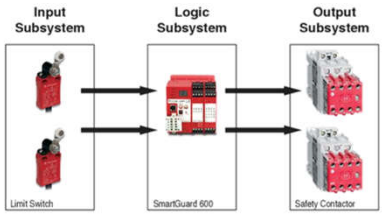

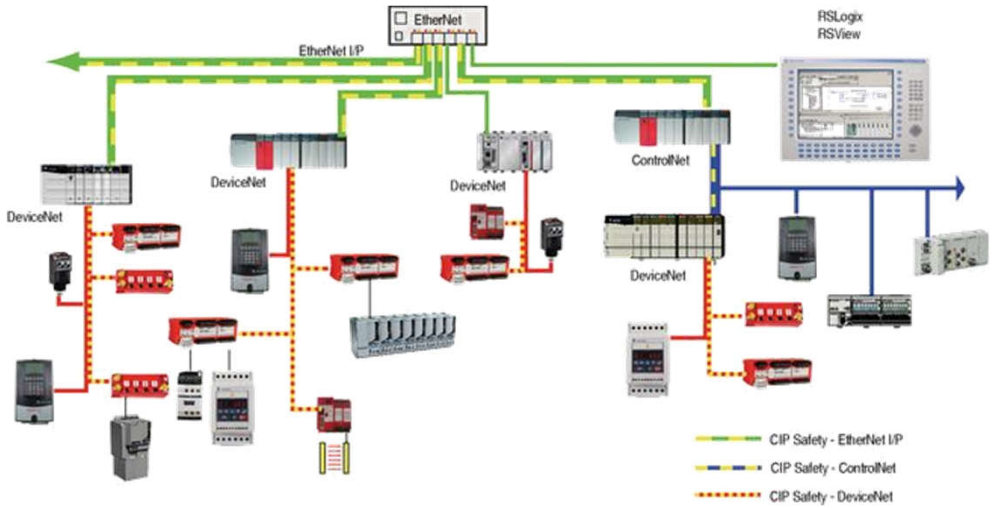

Integrated Safety and Automation Control Architecture

Technology Advancements Provide Options

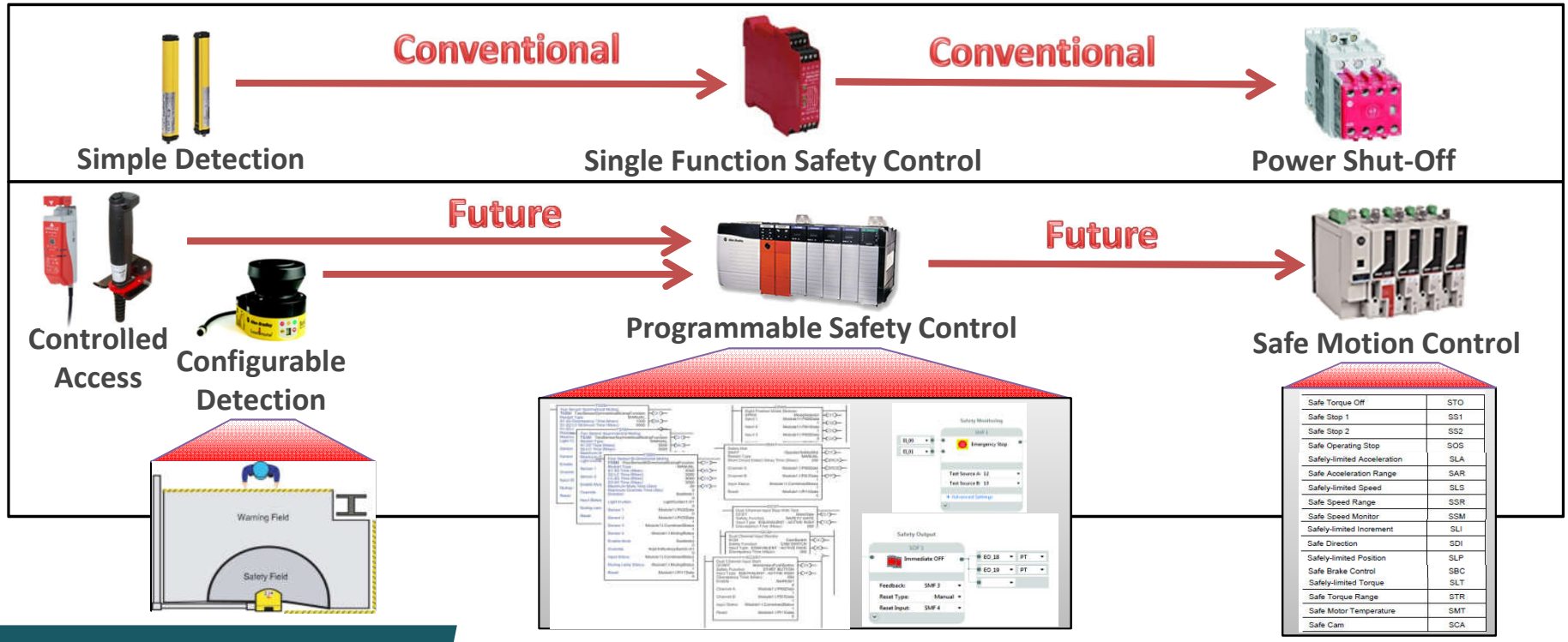

Why Is This Important Right Now?

Safety Standards

Safety Technology

Making the Right Decisions

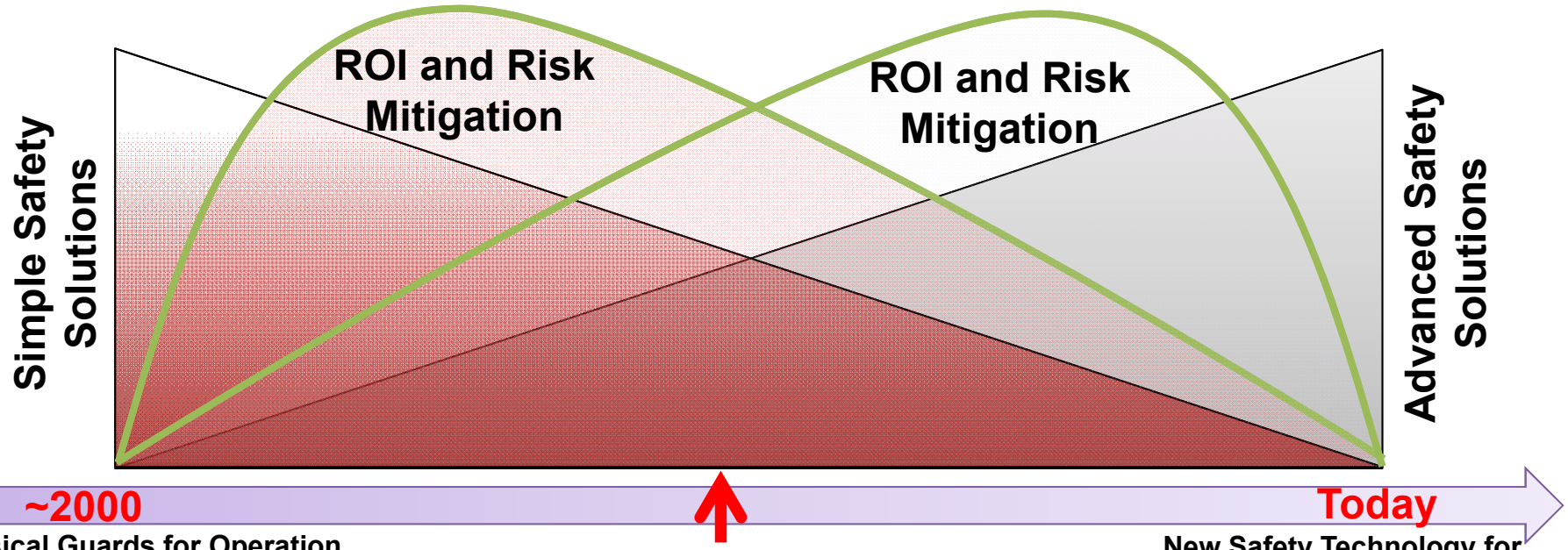

Today's Agenda

- Trends in Machine Safety
- Capital Project Savings Considerations
- Engineering Savings Considerations
- Operational Savings Considerations
- How to move forward

Reminder: Email your questions to jeff.winter@grantek.com

Capital Project Savings Considerations

THE PROBLEM:

Separation of safety and engineering projects can add incremental cost to an annual capital expense budget

Case Study 1: Combining Projects

TWO PROJECTS:

Project 1: Depalletizer Safety Upgrade

- Result of incident. Funded out of EH&S budget

Project 2: Legacy PLC migration, adding HMI

- PLC Upgrade project was requested because the older PLC was obsolete (~20 years old) with no ability to acquire spare parts or support. Project was funded from “Automation” budget.

Time difference: 6 Months

Case Study 1 - Project 1: Depalletizer Safety Upgrade

Depalletizer Safety Upgrade (Two Machines)	
Project Management	$7,130
System Integration (Software)	$11,040
Electrical Design	$28,520
Mechanical Design	$4,800
Electrical Hardware	$36,064
Mechanical Hardware	$40,000
Installation (Electrical & Mechanical)	$40,000
Commissioning and Startup Support	$23,080
Total	**$204,634**

Project Details:

- Add a secondary control panel for safety logic controller and associated hardware.
- Power to be removed on all elements controlling hazardous energy
- PLd/Category 3 safety architecture
- Compliant with PMMI B155.1

Case Study 1 - Project 2: The PLC Upgrade

PLC Upgrade with Panelview Plus (Two Machines)	
Project Management	$5,060
System Integration (Software)	$18,400
Electrical Design	$20,240
Mechanical Design	$0
Electrical Hardware	$30,954
Mechanical Hardware	$0
Installation (Electrical)	$9,000
Commissioning and Startup Support	$15,640
Total	**$99,294**

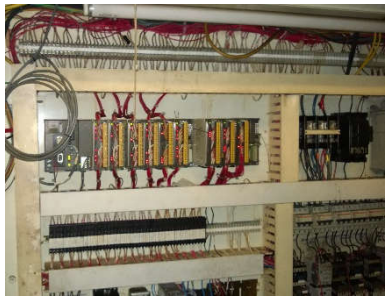

Project Details:

- Replace Modicon PLC with Controllogix 5000 platform and add Panelview HMI for enhanced operator control
- All of the new hardware will use Ethernet as the means of communication within the machine and with the plant network.

Case Study 1 : Original Controls Solutions

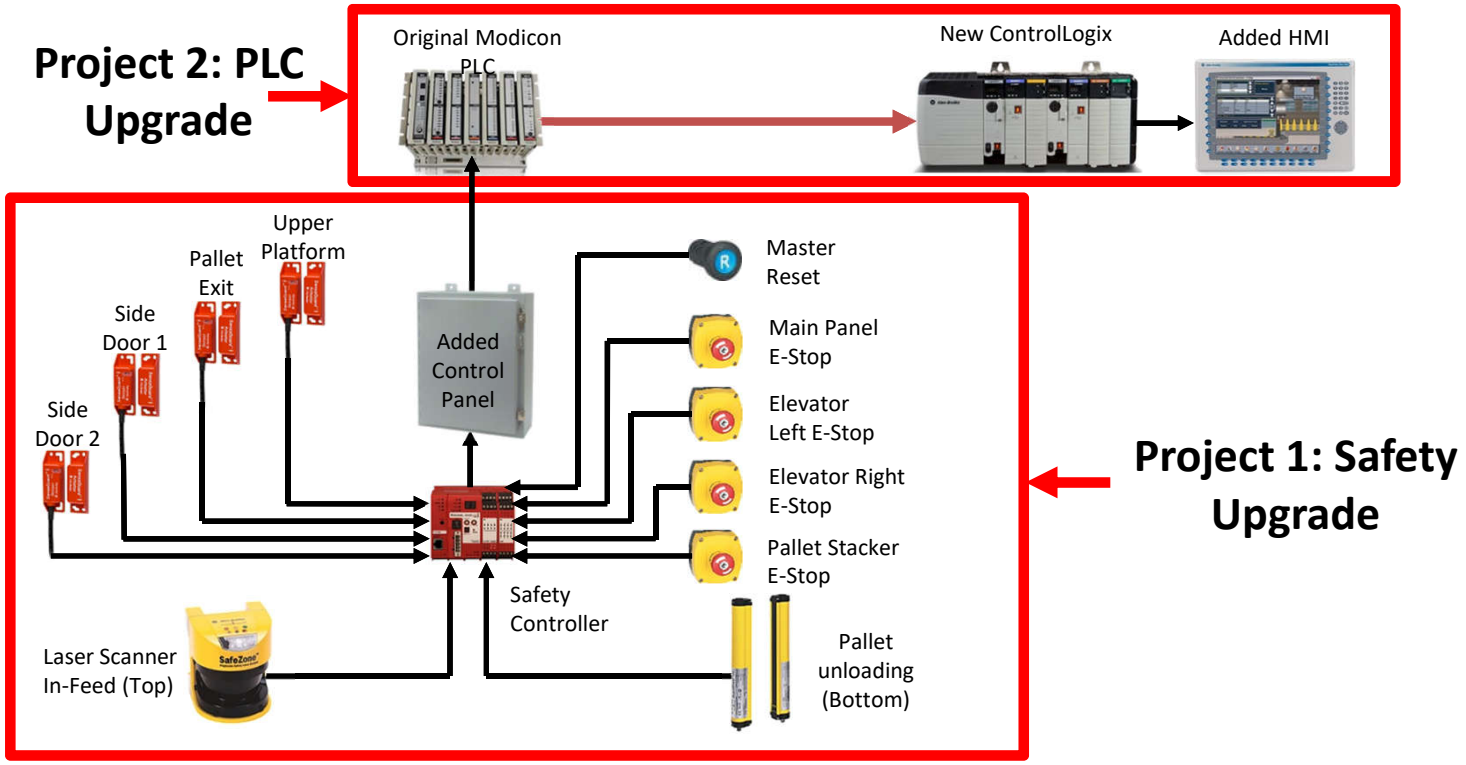

Case Study 1 - Combining Project 1 and Project 2

Independent Safety and PLC Upgrade (Two Machines)		Combined Projects	
			SAVINGS
Project Management	$12,190	$8,533	30%
System Integration (Software)	$31,440	$18,864	40%
Electrical Design	$50,760	$32,994	35%
Mechanical Design	$4,800	$4,800	0%
Electrical Hardware	$77,018	$77,018	0%
Mechanical Hardware	$40,000	$40,000	0%
Installation (Electrical & Mechanical)	$49,000	$46,550	5%
Commissioning and Startup Support	$38,720	$29,040	25%
Total	**$303,928**	**$257,799**	
Savings just by combining projects		**$46,149**	**15.2%**

Mobilization Time:
- Project understanding
- Kick-off meetings
- Info gathering

Project Management Time:
- Project planning
- Scheduling
- Financial Monitoring

Case Study 1 - Combining Project 1 and Project 2

Independent Safety and PLC Upgrade (Two Machines)		Combined Projects	
			SAVINGS
Project Management	$12,190	$8,533	30%
System Integration (Software)	$31,440	$18,864	40%
Electrical Design	$50,760	$32,994	35%
Mechanical Design	$4,800	$4,800	0%
Electrical Hardware	$77,018	$77,018	0%
Mechanical Hardware	$40,000	$40,000	0%
Installation (Electrical & Mechanical)	$49,000	$46,550	5%
Commissioning and Startup Support	$38,720	$29,040	25%
Total	**$303,928**	**$257,799**	
Savings just by combining projects		**$46,149**	**15.2%**

Programming:

- Code modification time (upgrade)
- Code writing time (new PLC)
- Program Evaluation Time
- Debugging time
- Quality control time

Case Study 1 - Combining Project 1 and Project 2

Independent Safety and PLC Upgrade (Two Machines)		Combined Projects	
			SAVINGS
Project Management	$12,190	$8,533	30%
System Integration (Software)	$31,440	$18,864	40%
Electrical Design	$50,760	$32,994	35%
Mechanical Design	$4,800	$4,800	0%
Electrical Hardware	$77,018	$77,018	0%
Mechanical Hardware	$40,000	$40,000	0%
Installation (Electrical & Mechanical)	$49,000	$46,550	5%
Commissioning and Startup Support	$38,720	$29,040	25%
Total	**$303,928**	**$257,799**	
Savings just by combining projects		**$46,149**	**15.2%**

Schematic changes:

- Safety project required modification of 12/15 existing drawings and creation of additional 14 new drawings
- PLC project would have required modification of all 15/15 drawings, plus a few new drawings.
- Average 15 minutes per schematic modification and 45 minutes per new schematic.
- Average 30 minute quality check per set

Case Study 1 - Combining Project 1 and Project 2

Independent Safety and PLC Upgrade (Two Machines)		Combined Projects	
			SAVINGS
Project Management	$12,190	$8,533	30%
System Integration (Software)	$31,440	$18,864	40%
Electrical Design	$50,760	$32,994	35%
Mechanical Design	$4,800	$4,800	0%
Electrical Hardware	$77,018	$77,018	0%
Mechanical Hardware	$40,000	$40,000	0%
Installation (Electrical & Mechanical)	$49,000	$46,550	5%
Commissioning and Startup Support	$38,720	$29,040	25%
Total	**$303,928**	**$257,799**	
Savings just by combining projects		**$46,149**	**15.2%**

Time:

- Reduction in travel time and expenses of only needing to be on site one time instead of two times.

Case Study 1 - Combining Project 1 and Project 2

Independent Safety and PLC Upgrade (Two Machines)		Combined Projects	
			SAVINGS
Project Management	$12,190	$8,533	30%
System Integration (Software)	$31,440	$18,864	40%
Electrical Design	$50,760	$32,994	35%
Mechanical Design	$4,800	$4,800	0%
Electrical Hardware	$77,018	$77,018	0%
Mechanical Hardware	$40,000	$40,000	0%
Installation (Electrical & Mechanical)	$49,000	$46,550	5%
Commissioning and Startup Support	$38,720	$29,040	25%
Total	**$303,928**	**$257,799**	
Savings just by combining projects		**$46,149**	**15.2%**

Commissioning time:

- Need for only one Site Acceptance Test (SAT).
- Decrease in construction management time
- Decrease in system debugging time
- Reduction of overall on-site time

Today's Agenda

- Trends in Machine Safety
- Capital Project Savings Considerations
- Engineering Savings Considerations
- Operational Savings Considerations
- How to move forward

Reminder: Email your questions to jeff.winter@grantek.com

Engineering Savings Considerations

THE PROBLEM:

Separate safety and automation projects minimize the ability to utilize integrated safety solutions, resulting in missed cost savings for engineering

Case Study 2 : Original Controls Solutions

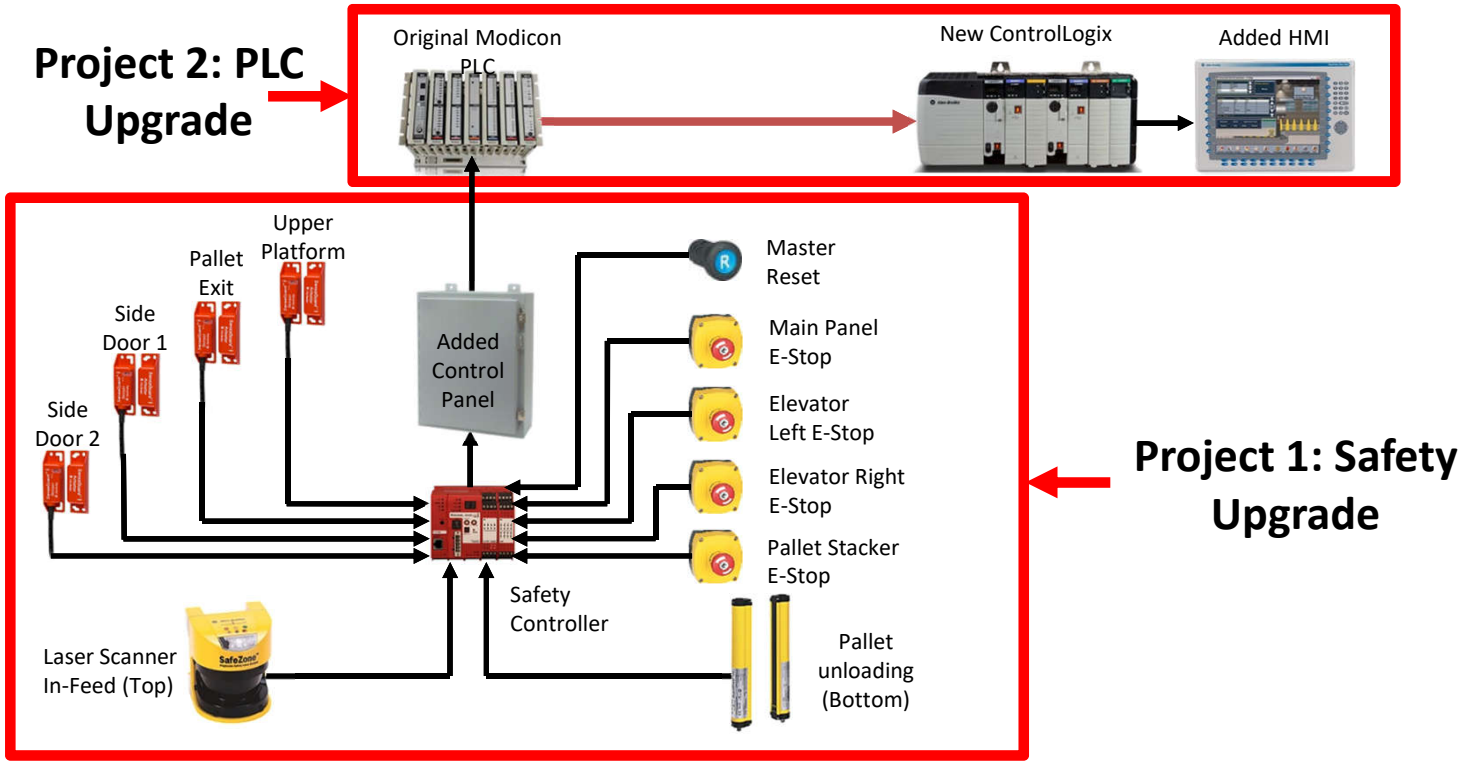

Case Study 2 : Re-Engineered Solution

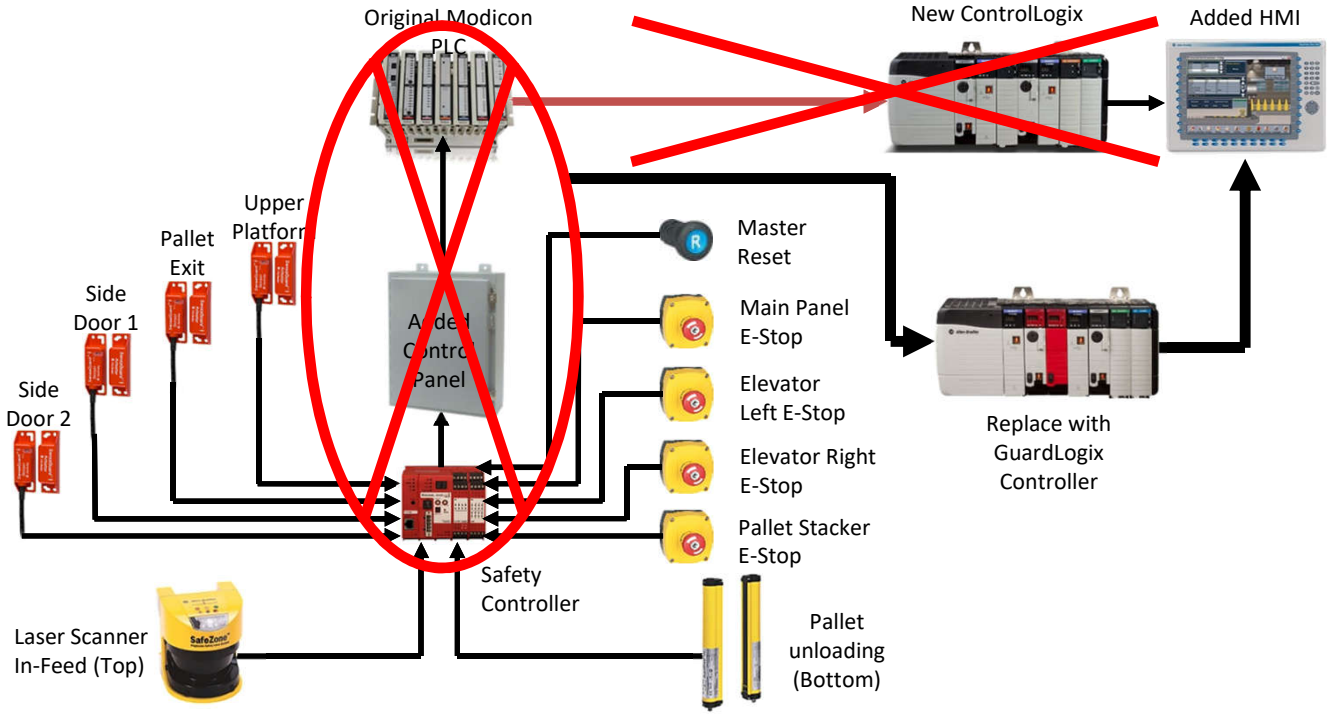

Case Study 2: Re-Engineered Savings

Case Study 2	Independent	Combined	Re-engineered		
					SAVINGS
Project Management	$12,190	$8,533	$8,533		30%
System Integration (Software)	$31,440	$18,864	$17,964	+3%	43%
Electrical Design	$50,760	$32,994	$32,194	+3%	37%
Mechanical Design	$4,800	$4,800	$4,800		0%
Electrical Hardware	$77,018	$77,018	$76,018	+1%	1%
Mechanical Hardware	$40,000	$40,000	$40,000		0%
Installation (Electrical & Mechanical)	$49,000	$46,550	$36,550	+20%	25%
Commissioning and Startup Support	$38,720	$29,040	$27,540	+4%	29%
Total	**$303,928**	**$257,799**	**$243,599**		
			Combined Savings:		
			$60,349		**19.8%**

Programming:

- Reduction in programming handshaking for Safety I/O status

Assumptions:

- Programmer would not need to learn another programming language for independent safety controller. Could add EXTRA cost
- No design changes

Newly Engineered Design:
Additional $14200 Savings

Case Study 2: Re-Engineered Savings

Case Study 2	Independent	Combined	Re-engineered		SAVINGS
Project Management	$12,190	$8,533	$8,533		30%
System Integration (Software)	$31,440	$18,864	$17,964	+3%	43%
Electrical Design	$50,760	$32,994	$32,194	+3%	37%
Mechanical Design	$4,800	$4,800	$4,800		0%
Electrical Hardware	$77,018	$77,018	$76,018	+1%	1%
Mechanical Hardware	$40,000	$40,000	$40,000		0%
Installation (Electrical & Mechanical)	$49,000	$46,550	$36,550	+20%	25%
Commissioning and Startup Support	$38,720	$29,040	$27,540	+4%	29%
Total	**$303,928**	**$257,799**	**$243,599**		
			Combined Savings:		
			$60,349		**19.8%**

Reduction in Design:

- No second panel developed
- Reduction in drawings due to simplified design inside main panel
- Anticipated adding only 4 new drawings instead of 14 new drawings

Assumptions:

- No design changes

Newly Engineered Design:
Additional $14200 Savings

Case Study 2: Re-Engineered Savings

Case Study 2	Independent	Combined	Re-engineered		SAVINGS
Project Management	$12,190	$8,533	$8,533		30%
System Integration (Software)	$31,440	$18,864	$17,964	+3%	43%
Electrical Design	$50,760	$32,994	$32,194	+3%	37%
Mechanical Design	$4,800	$4,800	$4,800		0%
Electrical Hardware	$77,018	$77,018	$76,018	+1%	1%
Mechanical Hardware	$40,000	$40,000	$40,000		0%
Installation (Electrical & Mechanical)	$49,000	$46,550	$36,550	+20%	25%
Commissioning and Startup Support	$38,720	$29,040	$27,540	+4%	29%
Total	**$303,928**	**$257,799**	**$243,599**		
			Combined Savings:		
			$60,349		**19.8%**

Hardware cost:

- GuardLogix hardware costs slightly more than ControlLogix, Safety Controller, and associated electrical hardware
- No need for secondary panel and associated hardware

Assumptions:

- No design changes

Newly Engineered Design:
Additional $14200 Savings

Case Study 2: Re-Engineered Savings

Case Study 2	Independent	Combined	Re-engineered		
					SAVINGS
Project Management	$12,190	$8,533	$8,533		30%
System Integration (Software)	$31,440	$18,864	$17,964	+3%	43%
Electrical Design	$50,760	$32,994	$32,194	+3%	37%
Mechanical Design	$4,800	$4,800	$4,800		0%
Electrical Hardware	$77,018	$77,018	$76,018	+1%	1%
Mechanical Hardware	$40,000	$40,000	$40,000		0%
Installation (Electrical & Mechanical)	$49,000	$46,550	$36,550	+20%	25%
Commissioning and Startup Support	$38,720	$29,040	$27,540	+4%	29%
Total	**$303,928**	**$257,799**	**$243,599**		
			Combined Savings:		
			$60,349		**19.8%**

Newly Engineered Design:
Additional $14200 Savings

Installation cost:

- Biggest reduction in cost/time is in avoiding installation of second panel
- Reduction in wiring
- Reduction in component installation time

Assumptions:

- No design changes

Case Study 2: Re-Engineered Savings

Case Study 2	Independent	Combined	Re-engineered		
					SAVINGS
Project Management	$12,190	$8,533	$8,533		30%
System Integration (Software)	$31,440	$18,864	$17,964	+3%	43%
Electrical Design	$50,760	$32,994	$32,194	+3%	37%
Mechanical Design	$4,800	$4,800	$4,800		0%
Electrical Hardware	$77,018	$77,018	$76,018	+1%	1%
Mechanical Hardware	$40,000	$40,000	$40,000		0%
Installation (Electrical & Mechanical)	$49,000	$46,550	$36,550	+20%	25%
Commissioning and Startup Support	$38,720	$29,040	$27,540	+4%	29%
Total	**$303,928**	**$257,799**	**$243,599**		
			Combined Savings:		
			$60,349		**19.8%**

Newly Engineered Design:
Additional $14200 Savings

Commissioning Time:

- Reduction in debugging time with single Logic controller
- Reduction in debugging time with better diagnostic capabilities
- Reduction in SAT time through less fault testing and I/O checks (Functional testing remains the same)

Assumptions:

- No design changes

Case Study 3: Engineering Savings Expanded Further

How could these savings expand with a corporate imitative?

Case Study 3:

84 Palletizers, Depalletizers, & Stretch Wrappers across an organization

	Number of Occurrences (Out of 84)	Average Cost Per Occurrence	Average anticipated cost with an Integrated Solution Per Occurrence	Overall Savings with an Integrated Solution
Functional modification requiring design change of safety system	51	$8,500	$5,000	$178,500
Modification to existing environment to support additional panel	17	$3,000	$0	$51,000

Today's Agenda

- Trends in Machine Safety
- Capital Project Savings Considerations
- Engineering Savings Considerations
- Operational Savings Considerations
- How to move forward

Reminder: Email your questions to jeff.winter@grantek.com

Operational Savings Considerations

THE PROBLEM:

Conventional (Independent) Safety solutions can have a big impact on operational downtime and Overall Equipment Effectiveness (OEE)

Case Study 4: Project Downtime Evaluation

Safety Upgrade Project	PLC Upgrade Project	Total	Combined Projects	Re-Engineered Solution
Production Downtime	Production Downtime	**Production Downtime**	Production Downtime	Production Downtime
6 Days	4 Days	**10 Days**	7-8 Days	7-8 Days

Estimated Project Downtime Savings:

2-3 Days!

How much would this impact production?

Case Study 4: Operational Downtime

	Independent Safety	Integrated Safety
PLANNED:		
Average Forklift entrances into palletizer/Depalletizer in 24 hour shirt	96	
Average "Reset" time	15 Seconds	3 Seconds
Total Time Per Day	**24 Minutes**	**4.8 Minutes**
UNPLANNED:		
Full Machine Stop "Restart" time	15 Seconds to 15 Minutes	3 Seconds to 1 Minute

Integrated Safety Modifications:

- Isolation of Entry Points (Zoning)
- Control awareness of machine zones/cycles
- Ability to "Pause" motion V.s "Removal of Power"

Assumptions:

- Operators are entering the forklift at the appropriate times
- Zoning is cost prohibitive in independent safety solution

Case Study 2: Operational Downtime

	Independent Safety	Integrated Safety
PLANNED:		
Average Forklift entrances into palletizer/Depalletizer in 24 hour shirt	96	
Average "Reset" time	15 Seconds	3 Seconds
Total Time Per Day	**24 Minutes**	**4.8 Minutes**
UNPLANNED:		
Full Machine Stop "Restart" time	15 Seconds to 15 Minutes	3 Seconds to 1 Minute

Integrated Safety Modifications:
- PLANNED Vs. UNPLANNED are now the same

Assumptions:
- Zoning is cost prohibitive in independent safety solution
- Average downtime decreases, not just longest downtime event.

Case Study 4: Troubleshooting Time

	Independent Safety	Integrated Safety
Operator Troubleshooting Time	5-20 min	0-5 min
Technical Troubleshooting Time	20-90 min	5-30 min

Troubleshooting Costs:
Direct Personnel Costs + Downtime Costs

Troubleshooting Methods:
- Operators will review status indicators
- Operators will attempt basic troubleshooting (e.g. reset system, open/close gates, etc.)

Assumptions:
- Operators are well training on the system
- Independent Safety only has basic alarm status indication.
- Times are considered "average" and only include minor repairs

Case Study 4: Troubleshooting Time

	Independent Safety	Integrated Safety
Operator Troubleshooting Time	5-20 min	0-5 min
Technical Troubleshooting Time	20-90 min	5-30 min

Troubleshooting Costs:
Direct Personnel Costs + Downtime Costs

Troubleshooting Methods:
- Technicians will evaluate hardware and software
- Technicians will attempt advanced troubleshooting (e.g. Opening panel and connecting to PLC/Safety PLC, etc.)

Assumptions:
- Technicians are well training on the platforms
- Times are considered "average" and only include minor repairs

Today's Agenda

- Trends in Machine Safety
- Capital Project Savings Considerations
- Engineering Savings Considerations
- Operational Savings Considerations
- How to move forward

Reminder: Email your questions to jeff.winter@grantek.com

Key Takeaways

The Takeaways:

- Lower capital costs by combining your safety and automation projects
- Lower your engineering costs through integrated safety solutions (Applies to upgrades or new equipment)
- Lower your operational costs with less downtime through integrated safety
- Lower your lifecycle costs through lower costs on future modifications or changes

Things to Consider…

1) Does your company have any planned safeguarding upgrade projects in the next 5 years?
2) Does your company have any automation-related upgrades in the next 5 years? (especially obsolescence planning)
3) Have you looked into how safe automation technology can improve your productivity (or safety)?
4) Are your engineering and safety equipment specifications updated to take advantage of new safety automation technology?

Control Engineering Article

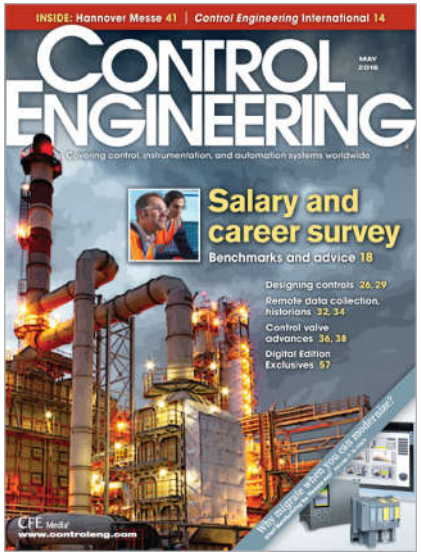

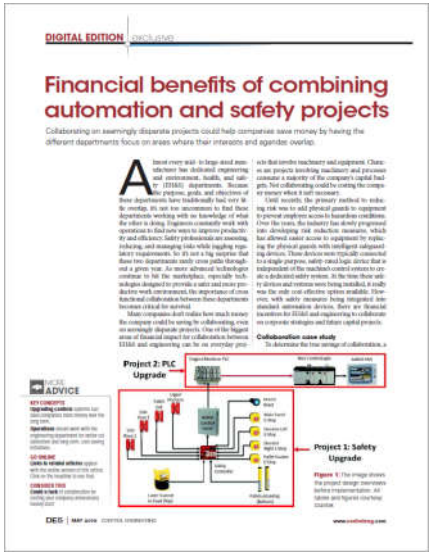

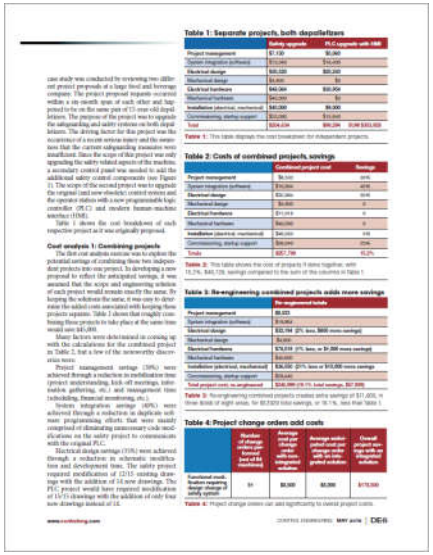

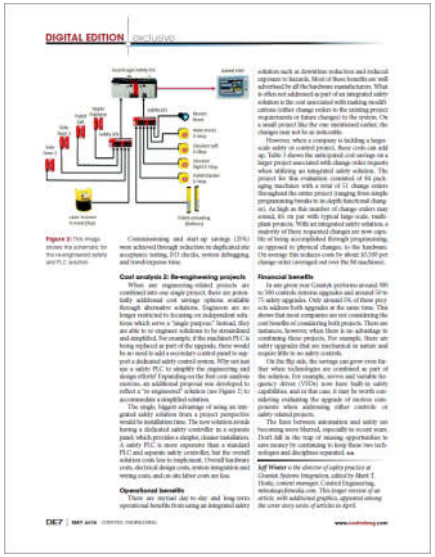

[Direct Link to Magazine Article]

Questions?

Reminder: Email your questions to jeff.winter@grantek.com